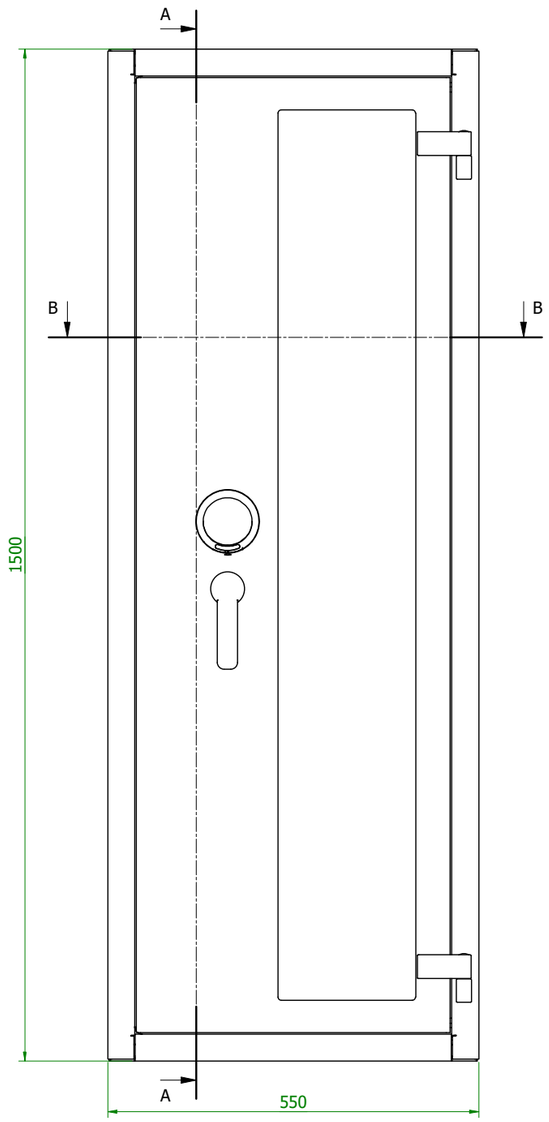
A
B
B
1500
A
550

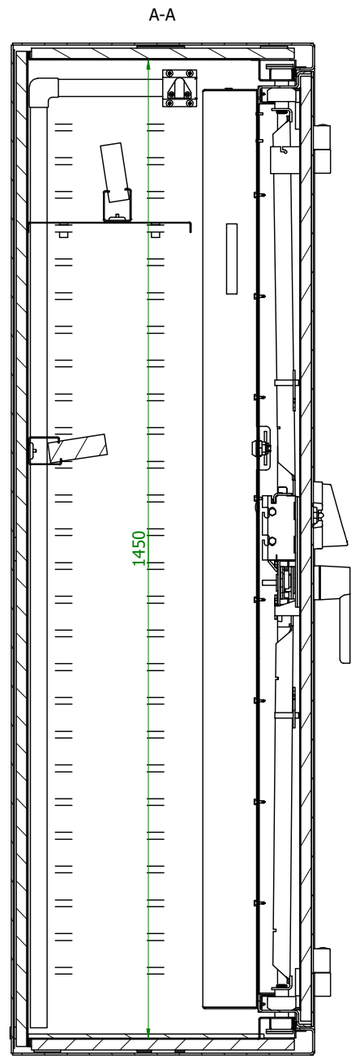
A-A
1450

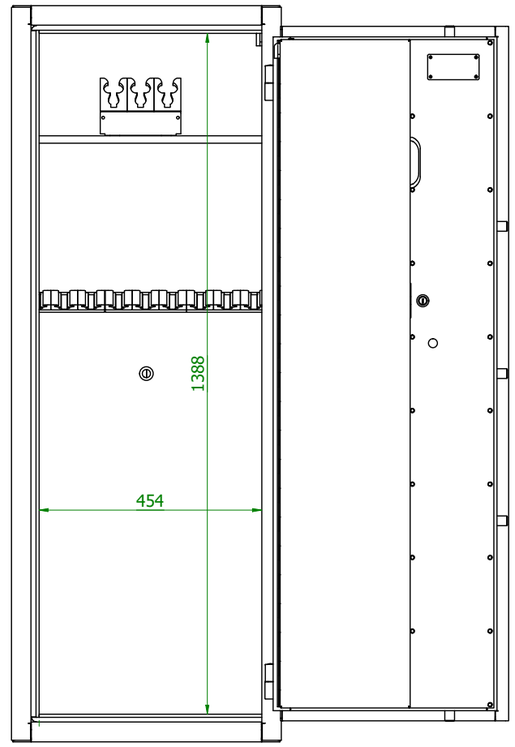
1388
454

D

LED

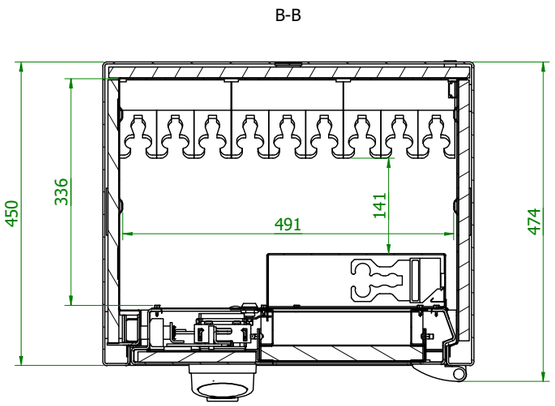
B-B
450
336
491
141
474

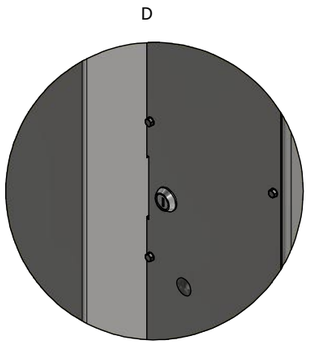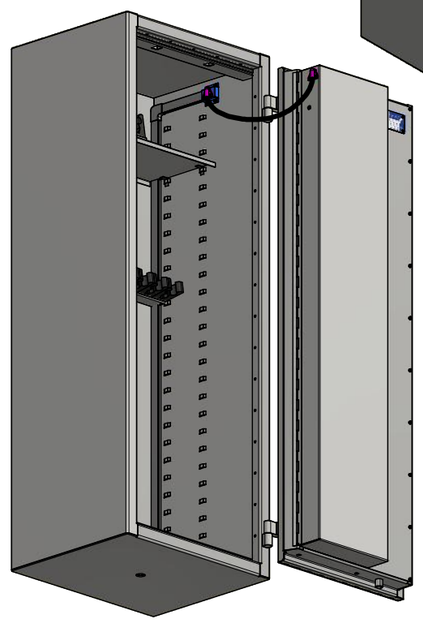
D